BTPay 200 ™

Bluetooth Payment Terminal w/MagStripe, Chip and PIN

Secure Payment Terminal for Mobile Phones

The ID TECH BTPay 200 is a secure payment terminal with an integrated MagStripe reader, smart card reader, and PIN pad that connects to mobile devices and PCs via Bluetooth. The BTPay 200 is a PCI 3.x certified and EMV Level 2 certified payment terminal that provides safe and secure transactions.

Easy to Integrate

The ID TECH BTPay 200 is compatible with Apple, and Android mobile devices, and can also connect to PCs via USB. The SDK allows developers to easily create mobile apps to communicate with the terminal. With compatible apps, the BTPay 200 provides merchants the flexibility to accept both MagStripe and Chip & PIN payments anywhere at any time.

Incredible Convenience

The ID TECH BTPay 200 allows merchants to provide their customers with the convenience of a mobile method of payment. With the capability to read MagStripe cards and smart cards, merchants can take a variety of payment methods and save money by avoiding costly card-not-present fees. With the ID TECH BTPay 200, merchants can accept card payments wherever they go.

Features and Benefits:

- MagStripe and Chip Card reading & PIN entry for mobile devices
- EMV Level 2 Certified
- PCI-PTS 3.x Certified with SRED function supported
- DES and TDES encryption algorithms for PIN encryption
- AES, DES, and TDES encryption algorithms for MagStripe data encryption
- DUKPT Key Management
- Supports encrypted manual card data entry
- 4 Lines X 20 characters backlit LCD

IDTECH®
Value through Innovation

BTPay 200 ™

Specifications IDMR-PBT81133TEB

Electrical

Interfaces:	Bluetooth USB-HID

Environmental

Operating Temperature:	32°F to 131°F (0°C to 55°C)
Storage Temperature:	-22°F to 158°F (-30°C to 70°C)
Humidity:	Maximum 95% non-condensing, dry storage

Reliability

Operating Life:	MagStripe Reader: 300,000 card swipes minimum Smart Card Reader: 100,000 card cycles minimum PIN Pad: 1,000,000 keystrokes minimum
Warranty:	One year, parts and labor
Approvals:	EMV Level 1 & 2, PCI 3.x with SRED function supported, ROHS, FCC/CE

Mechanical

Dimension (L)x(W)x(H):	5.20 inches (132mm) x 2.83 inches (72mm) x 1.46 inches (37mm)
Media Thickness:	0.027 inches (0.6858mm) minimum 0.033 inches (0.8382mm) maximum
Card Seated Switch:	ICC fully-seated sensor
Color:	Black
Display:	4 lines X 20 characters backlit LCD
Keypad:	Hard rubber & color-coded ANSI X9.8 recommended layout

Footprint:

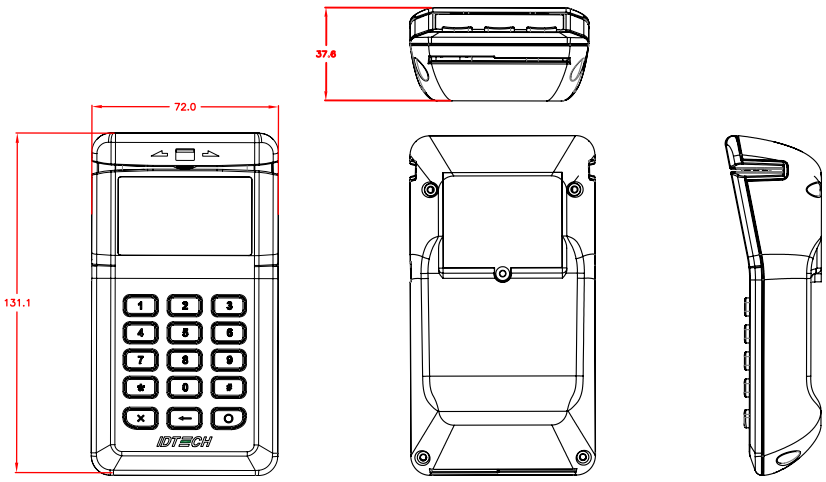

United States Sales Office

Corporate Headquarters
10721 Walker Street
Cypress, CA 90630
Phone: (714) 761-6368
Toll Free:(800) 984-1010
Fax: (714) 761-8880
sales@idtechproducts.com

International Sales Offices

Asia
+866-3-496-6988 (Taiwan)
asia@idtechproducts.com.tw

Canada
+450-465-5261
robertop@idtechproducts.com

South America
+55-11-3079-2255
internationalsales@idtechproducts.com

Europe
Germany & United Kingdom
emea@idtechproducts.com

ISO 9001 Certified

IDTECH®
Value through Innovation
www.idtechproducts.com

©2015 International Technologies & Systems Corporation. ID TECH & ViVOpay are registered trademarks of International Technologies & Systems Corporation.
BTPay 200 and Value through Innovation are trademarks of International Technologies & Systems Corporation. All specifications subject to change without notice.

80121502-001 R02/15